vision solution

Specification

SBS-SCJ372-0.042

High Resolution Double Telecentric Lens

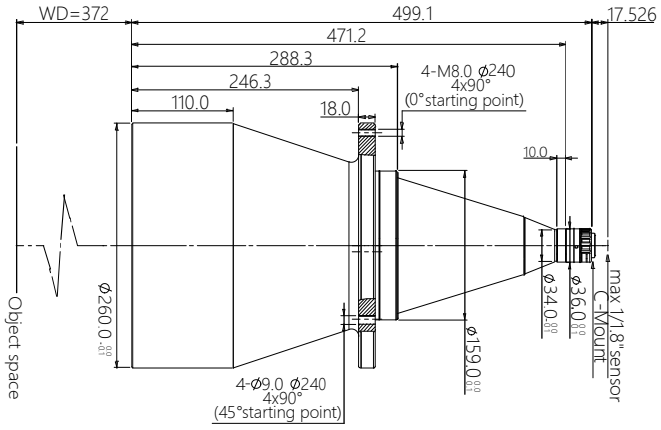

Features (SBS-SCJ series)

* Excellent double telecentric design for high resolution image result.
* Field of view is from 26mm to 300mm, suitable for most of application.
* Big Iris, low distortion, high parallel degree, big depth of view.
* Sensor size is available for 1/2.5″ 1/2″ 1/1.8″ 2/3″ 1″ 4/3″ 1.75″ 2″Φ39 35mm full.

Parameters

FOV (Dia.mm)	216
Mag.(x)	0.042
WD (mm)	372±5
Sensor size (Dia.mm)	9.0(1/1.8")
Image F#	4.6
Image MTF30(pl/mm)	>200
Object DOF (mm)	±249@F11
Object distortion (%)	<0.1
Object telecentric degree	<0.1
Object I/O(mm)	889±5

Mechanical

Mount	C
Total length (mm)	499.1
N.W(KG)	13.7

Field of View (mm x mm)

1/1.8" IMX178 (7.43x4.9)	176.9x116.7
1/1.8" IMX252/265 (7.1x5.3)	169.0x126.2